COMMERCIAL LED GEOMETRIC PENDANT LIGHT CLB-00582

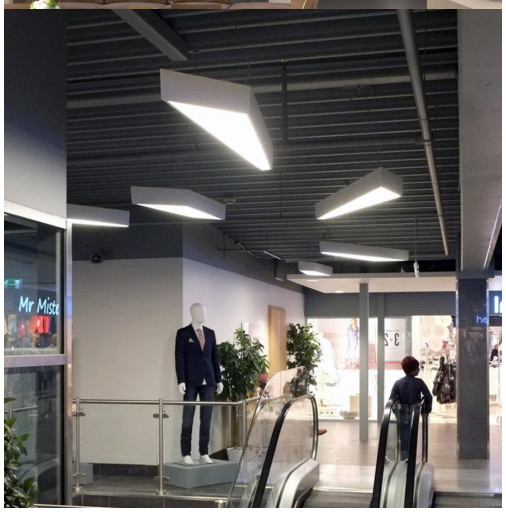

Part: N/A
Category: Lighting

ADDITIONAL INFORMATION

Finish

ADDITIONAL INFORMATION

Finish

GALLERY IMAGES

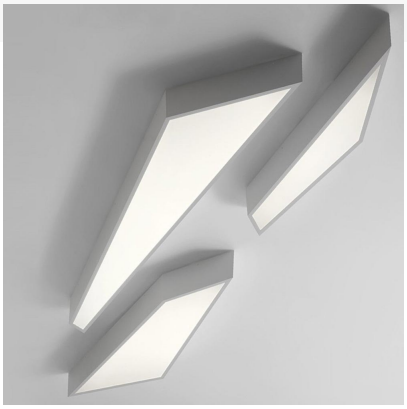

PRODUCT DESCRIPTION

COMMERCIAL LED GEOMETRIC PENDANT LIGHT CLB-00582

Suspended Commercial LED Geometric Pendant Light Luminaire which can also be surface mounted.

White aluminium material structure which gives a downwards light.

- IP Rated - IP20
- DIM DALI

Suspended Models

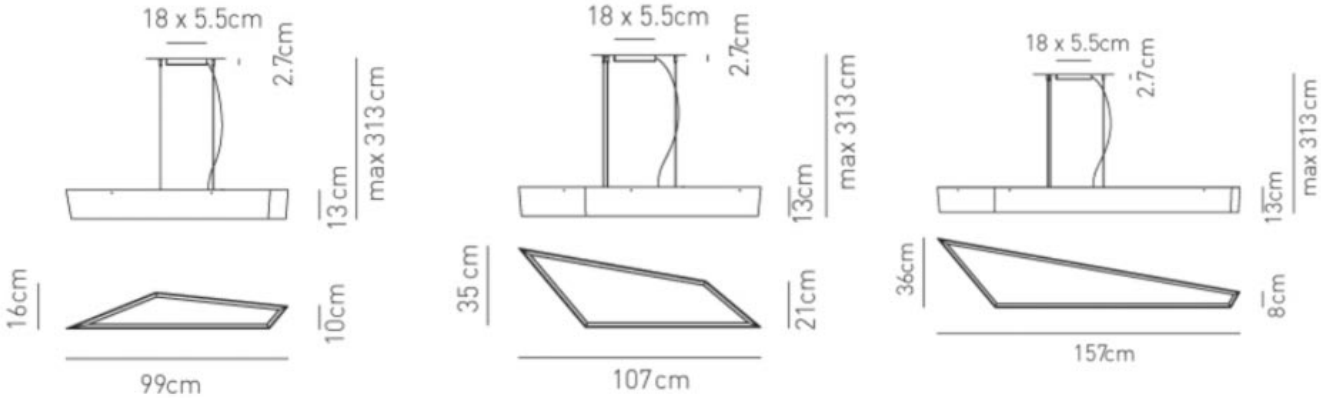

- Max Height - 3110mm
- Height - 130mm
- Width - 99mm
- Kelvin - 3000K
- Lamp - 1 x LED 32.8W
- Lumen - 2080lm
- Wattage - 32.8W

- Max Height - 3110mm
- Height - 130mm
- Width - 107mm
- Kelvin - 3000K
- Lamp - 1 x LED 65.5W
- Lumen - 4260lm
- Wattage - 65.5W

- Max Height - 3110mm
- Height - 130mm
- Width - 157mm
- Kelvin - 3000K
- Lamp - 1 x LED 98.4W
- Lumen - 7440lm
- Wattage - 98.4W

Surface Mounted Models

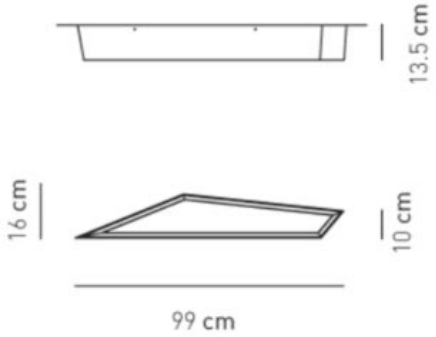

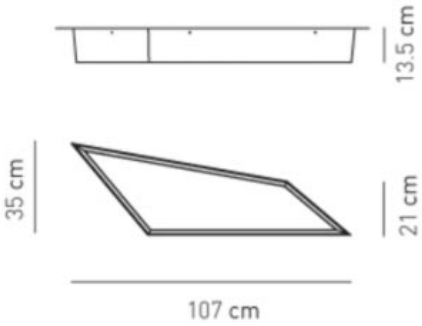

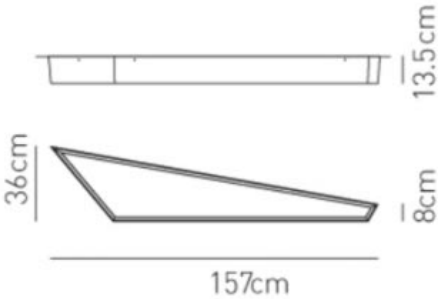

- Height - 130mm
- Width - 99mm
- Kelvin - 3000K
- Lamp - 1 x LED 32.8W
- Lumen - 2080lm
- Wattage - 32.8W

- Height - 130mm
- Width - 107mm
- Kelvin - 3000K
- Lamp - 1 x LED 65.5W
- Lumen - 4960lm
- Wattage - 65.5W

- Height - 130mm
- Width - 157mm
- Kelvin - 3000K
- Lamp - 1 x LED 98.4W
- Lumen - 7440lm
- Wattage - 98.4W

Please Contact for delivery times